GNRHS Archives 2018

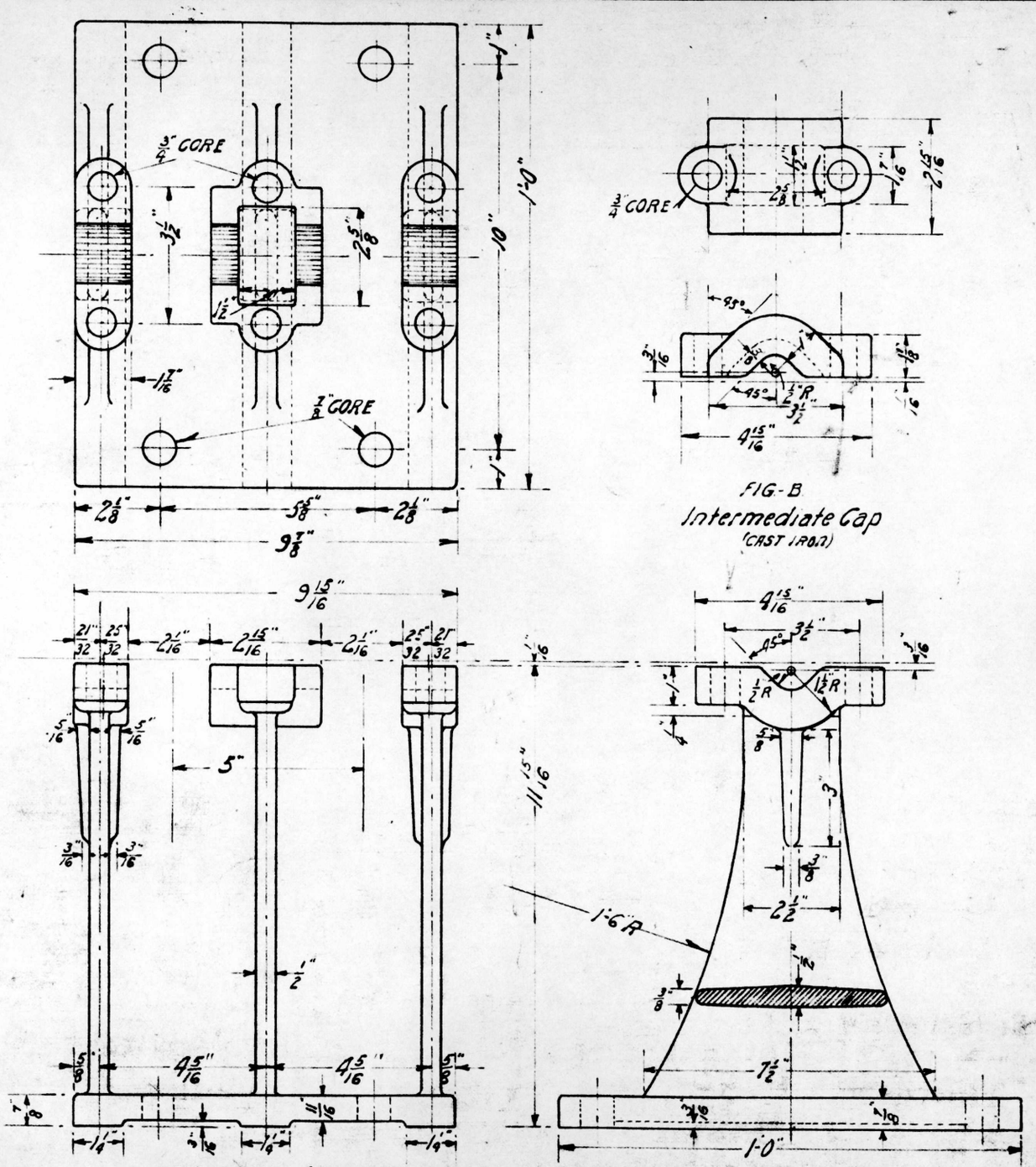

FIG-A (CAST IRON)
2-Way Vertical Crank Stand

FIG-B
Intermediate Cap
(CAST IRON)

G. N. RY.

PLAN OF STANDARD

2-WAY VERTICAL CRANK STAND
12" HIGH

OFFICE OF SIGNAL ENGINEER

SCALE 1/4 IN. :: 1 IN. DECEMBER 1917

BILL OF MATERIAL			
2-WAY 12" VERTICAL CRANK STAND.			
1-CRANK STAND	FIG-A.	PATTERN NO.	R 3933
2-ENDCAPS 167-64	" B	" "	" 3932
1-INTERMEDIATE CAP	" B	" "	" 3935
2-PINS 167-64	" C		
6-5/8" x 3 1/4" SQ.HD. BOLTS WITH HEX. NUTS & LOCK WASHERS			

Brawn by AAH
Checked by JBR
Approved by CAS
Signal Engr.
12-21-17
167-65A